Solis 01.01/02

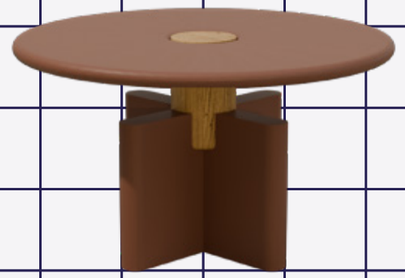

Ø52cm x W: 30cm

Design: Karol Droszcz

Solis 01.01 is a modern coffee table that combines minimalism with bold design. Its round tabletop paired with an oval structural element creates a unique geometry, adding elegance and lightness to any interior.

Thanks to its compact size, it can serve as a side table in the living room, bedroom, or any other space where style and functionality matter. A wide range of color options allows it to match any decor, and the ability to combine it with other models from the Solis collection makes it easy to create a unique composition.

It's a fusion of aesthetics and practical function that makes Solis 01.01 a distinctive accent in any space.

Tabletop/legs	RB/B/WG/DB* MDF	
	Oak/American Walnut	
Roller	Oak/American Walnut	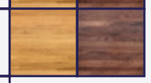
Size 01.01	Ø52cm x H: 30cm	
Size 01.02	Ø65cm x H: 38cm	

RB - red brown /B - blue/WG - warm grey/DB - dark blue*



snapp



Solis 01.01

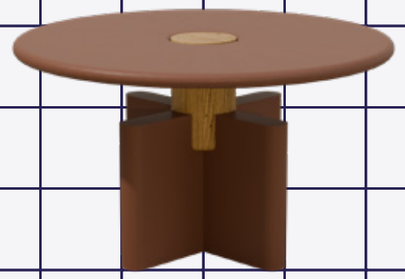

Ø52cm x W: 30cm

Design: Karol Droszcz

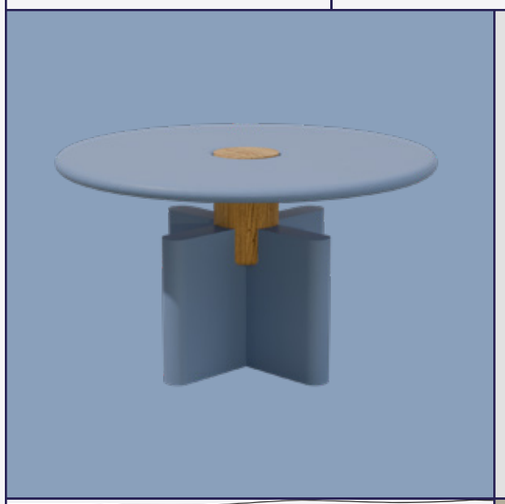





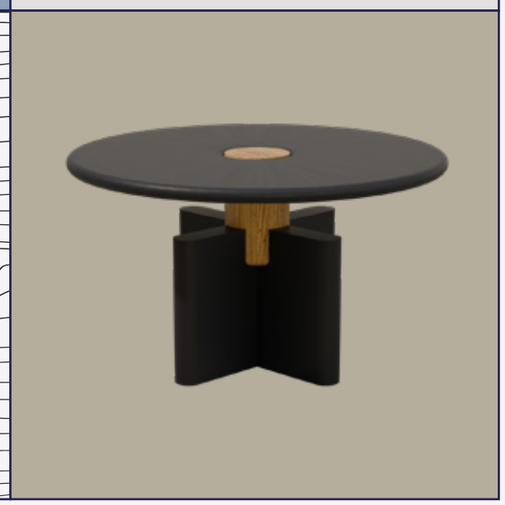



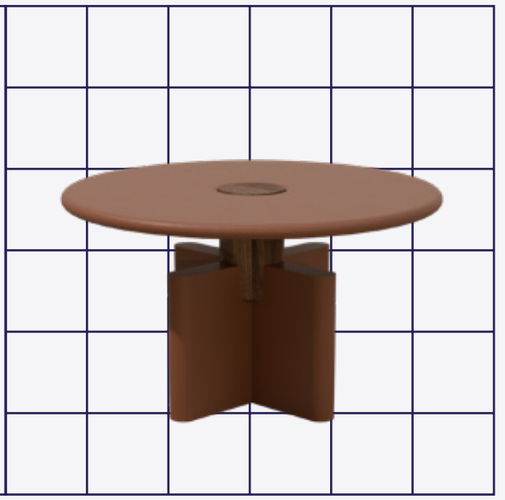

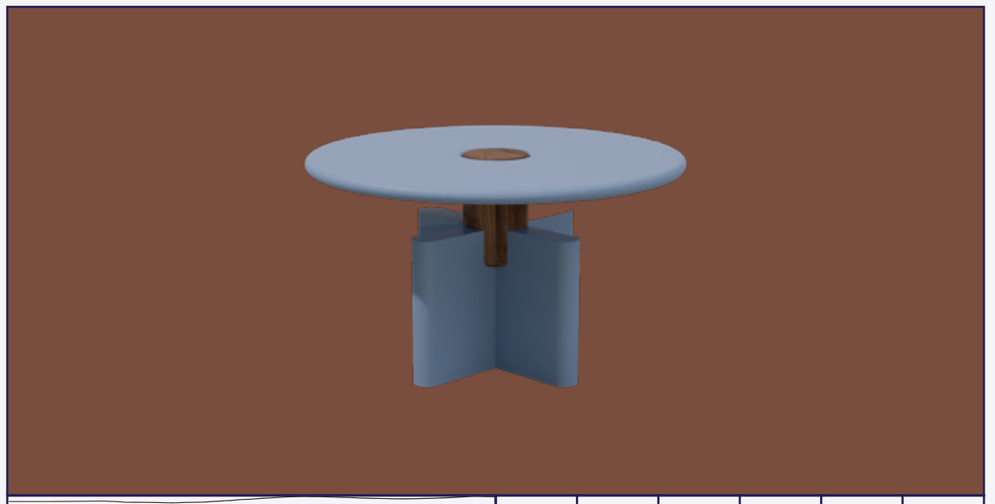





Solis 01.03

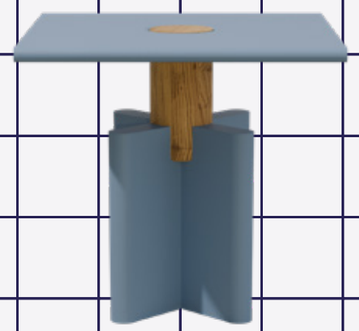

L: 43cm W: 43cm, H: 41cm

Design: Karol Droszcz

Solis 01.02 is a side table that captivates with its original form and refined aesthetics. Its square tabletop combined with an oval structural element creates a unique geometry, blending raw precision with subtle harmony.

The rich color palette allows it to complement various interiors, while the option to pair it with other models from the Solis collection enables the creation of cohesive and distinctive arrangements. It's a fusion of aesthetics and functionality that enhances the character of modern spaces.

The tabletop and base are made from high-quality MDF, while the central rod inside the table is crafted from natural wood.

Tabletop/legs	RB/B/WG/DB* MDF	
	Oak/American Walnut	
Roller	Oak/American Walnut	
Size	L: 43cm W: 43cm, H: 41cm	

RB - red brown /B - blue/WG - warm grey/DB - dark blue*

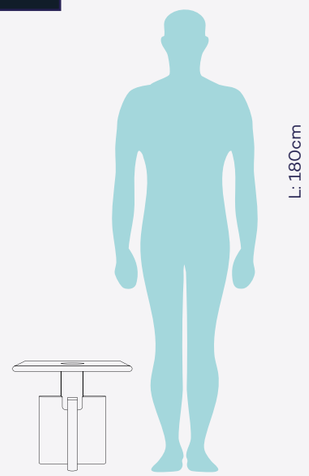

snapp



Solis 01.03

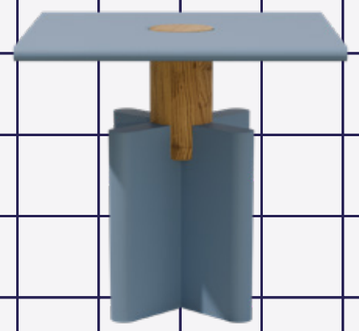

L: 43cm W: 43cm, H: 41cm

Design: Karol Droszcz











